DRAWING No. 1-80-335-19064

ALL DIMENSIONS ARE IN MILLIMETRES

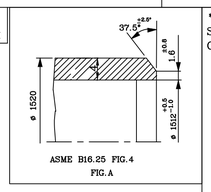

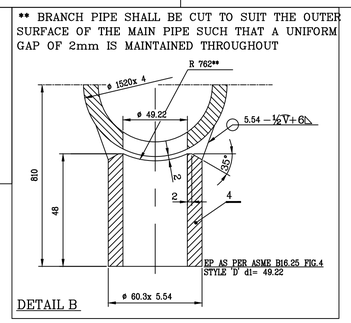

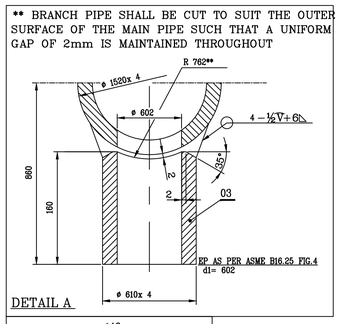

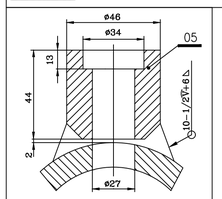

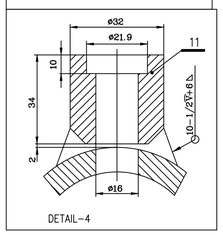

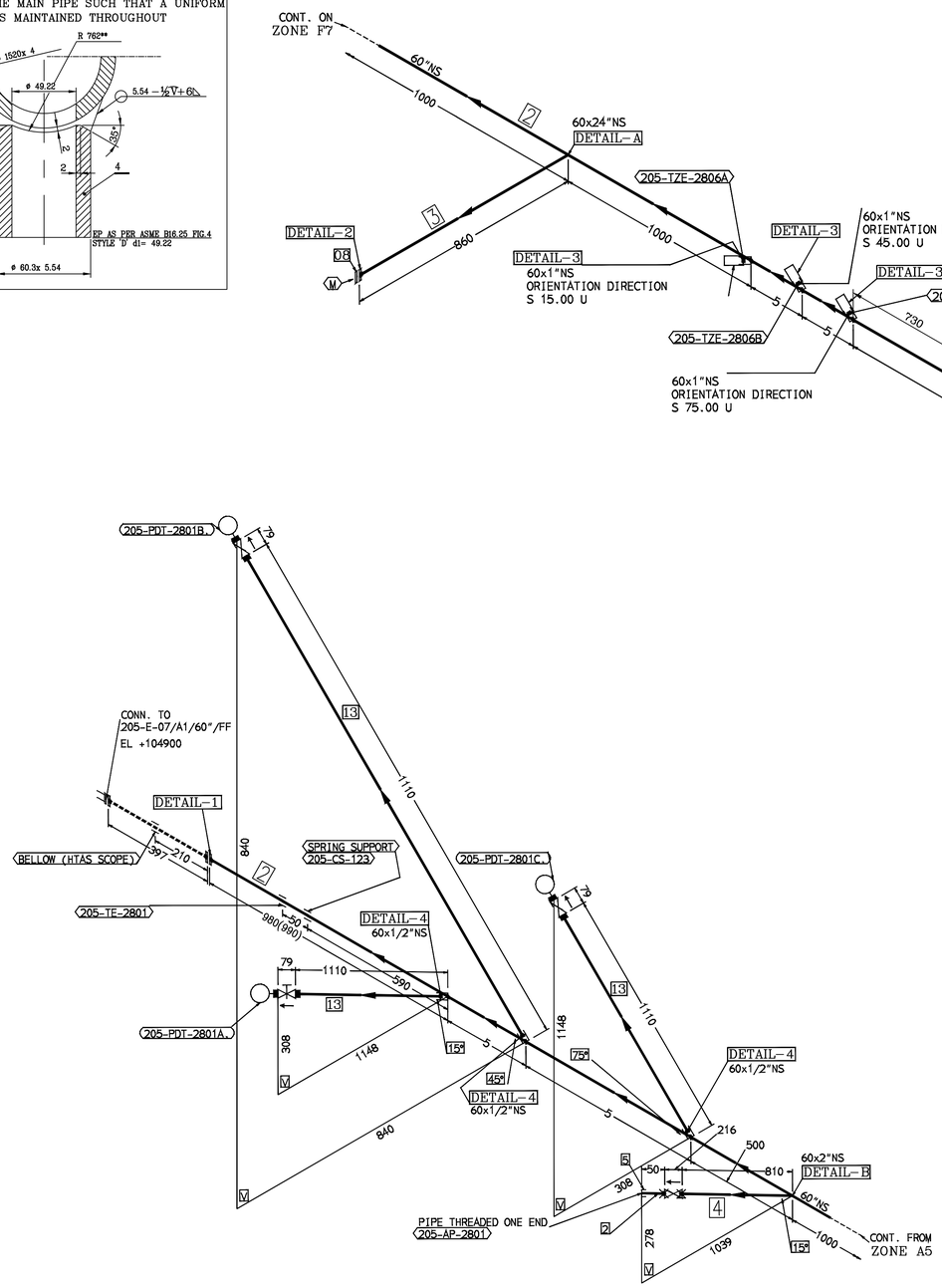

NOTES:

1. DESIGN PRESSURE – 0.2 KG/CM2 (G) DESIGN TEMPERATURE: 300°C
2. FOR STANDARD NOTES OF PRODUCTION AND ERECTION OF PIPES AND TOLERANCE ON FITTINGS REFER DRG NO. 4-80-001-37654 & 4-80-301-26192
3. FOLLOW APPLICABLE QP AND PAINTING SCHEDULE FOR THE PROJECT
4. ALL UNMARKED BENDS/ELBOWS ARE 90 DEG
5. PIPE ENDS SHALL BE BEVELLED AS PER B16.25 FIG.4
6. GASKET IS SUPPLIED VIDE 7419-80-733 PGMA.
7. FOR ELECTRODE DATA REFER

PIPE SIZE	MATERIAL SPEC	EP FIG	WELD SPEC	ELECTRODE DATA	
				ROOT RUN	FILLER RUN
OD1520x4	ASTMA182GR.F316L	FIG-A	8 V	ER316L	ER316L/ E316L-15/16

8. THREADS SHALL BE UNIFIED(UNC FOR UPTO 1" DIA) AS PER ASME B1.1 WITH CLASS 2A FIT FOR STUDS AND CLASS 2B FIT FOR NUTS.
8. REPRESENTS SITE WELD.
9. REPRESENTS SHOP WELD.
10. MIXER PLATE SPE-115 IS SUPPLIED VIDE DU NO:XXX, TO BE WELDED AT SITE BEFORE ERECTION.
11. ITEM NO.01 IS SUPPLIED WITH 100mm ADDITIONAL LENGTH FOR SITE ADJUSTMENTS.

ITEM NO.	DESCRIPTION	DRAWING NO.	NO. / VAR NO.	MATERIAL CODE / MATERIAL SPEC.	A / C	UNIT WT. / QTY.
17	GASKET JOB STD EXPANDED PTFE CORD 150# 7MM THK – 60"	1-80-655-22720		---- / ----		--|-- / 1
16	GASKET JOB STD EXPANDED PTFE CORD 150# 7MM THK – 24"	1-80-655-22720		---- / ----		--|-- / 1
15	CAP B-16.11 SCRF 2" CL.3000	1-80-655-22720		--- / ASTM A 182 GR.F316L	C	0|300 / 1
14	PIPE OD60.3X5.54 L=50	1-80-655-22720		--- / ASTM A312 TP316L	C	0|375 / 1
13	PIPE OD21.3X3.73 L=4000	1-80-655-22720		--- / ASTM A312 TP316L	C	6|156 / 1
12	FLANGE.SO CL.150 FF/125AARH 60"	2-80-655-16056	13	--- / ASTM A 182 GR.F316L	C	59|157 / 1
11	SW STUB 1/2" CL:3000	4-80-655-83173		--- / ASTM A 182 GR.F316L	C	0|249 / 04
10	NUT 5/8" UNC	1-80-655-22720		---- / A-194 Gr.8M		0|033 / 136
09	STUD 5/8" UNC	1-80-655-22720		---- / A-193 Gr. B8M Cl. 2		0|224 / 68
08	BLIND FLANGE. CL.150 FF/125AARH 24"	2-80-655-16057	04	--- / ASTM A 182 GR.F316L	C	52|342 / 1
07	FLANGE.SO CL.150 FF/125AARH 24"	2-80-655-16056	04	--- / ASTM A 182 GR.F316L	C	33|059 / 1
06	PLUG B16.11 SCRM 1" CL3000	1-80-655-22720		--- / ASTM A 182 GR.F316L	C	0|200 / 3
05	SW STUB 1" CL3000	1-80-655-22720		--- / ASTM A182 GR.F316L	C	0|430 / 3
04	P.F BRANCH PIPE OD60.3X5.54 L=48	1-80-655-22720		--- / ASTM A312 TP316L	C	0|365 / 1
03	P.F BRANCH PIPE OD610X4 L=160	3-80-655-35573	04	--- / ASTM A240 GR.316L	C	9|747 / 1
02	P.F PIPE OD1520X4 L=4230	3-80-655-35669	02	--- / ASTM A240 GR.316L	C	644|347 / 1
01	P.F PIPE OD1520X4 L=2425	3-80-655-35669	01	--- / ASTM A240 GR.316L	C	369|395 / 1

CUST NO. 7419

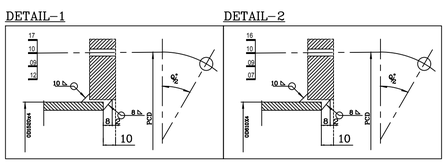

REV	DATE	ALTERED
01		APPROVED
ZONE		

N

CAUTION: The information on this document is the property of BHARAT HEAVY ELECTRICALS LTD. It must not be used directly or indirectly in any way detrimental to the interest of the company.

CUSTOMER INDIAN OIL CORPORATION LIMITED (HALDIA)

CONSULTANT ENGINEERS INDIA LIMITED (EIL), NEW DELHI

PROJECT BS-VI, HALDIA

BHARAT HEAVY ELECTRICALS LIMITED
PIPING CENTRE
CHENNAI 600 017

	NAME	SIGN	DATE	NO. C VAR.
DRN	M.P.K		04.05.19	
CHD	TRINADH		04.05.19	
APPD	VENKAT		04.05.19	

DEPT ENGG. CODE	GRADE OF UNTOL. DIM C/11 F	SCALE N.T.S	WEIGHT (KG)	ITEM No.

TITLE 60-P-205-2602-K42N-IH-E (SHEET 01&02)

CARD CODE U 01

PC DRAWING NO. 1-80-655-22720

REV 00

Size A1